BPR 401B

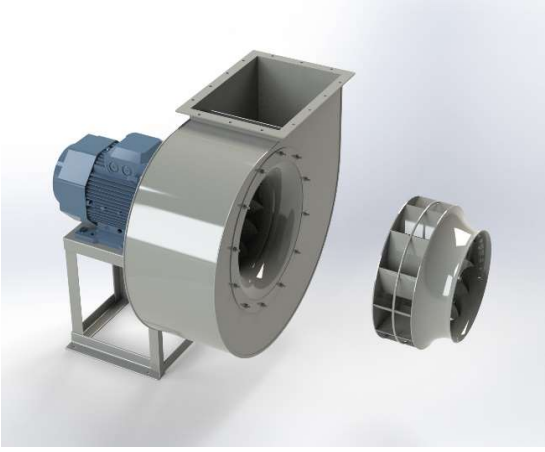

Centrifugal fan **model BPR, Es.4**
Single inlet fan, direct driven with an IEC-standard motor in form B3 which is mounted on a motorbase. The overhang impeller is mounted on the motor shaft and has backwardly curved blades. De blades are welded between the back plate disc and the aerodynamically formed front plate. The robust industrial fan is totally made of steel and painted in the agate grey color RAL 7038,. The fan is suitable for the transportation of clean and slightly dusty air.

General data:

Drive	direct	
Motor position	horizontal	
Material casing/base	Steel	
Material impeller/hub	Steel	
Coating/protection	RAL 7038	
Operating temperature (max.)	15 (80)	°C
Medium density (altitude 0 m)	1,226	kg/m^3
Impeller speed	2.930	rpm
Weight	134	kg
Sound pressure level ±3 (at 1,5 m near the fan with inlet and outlet ducted, in free field)	82	dB(A)

Electric motor:	132S	IEC
Power	5,5	kW
Motor speed	2.930	rpm
Electric supply	3x400V50Hz	V/Hz
Full load current	10,6	A
Enclosure	55	IP
Shape	B3T	
Efficiency class	IE3	

Curve BPR 401B @ 2930rpm @ 15°C @ 0m

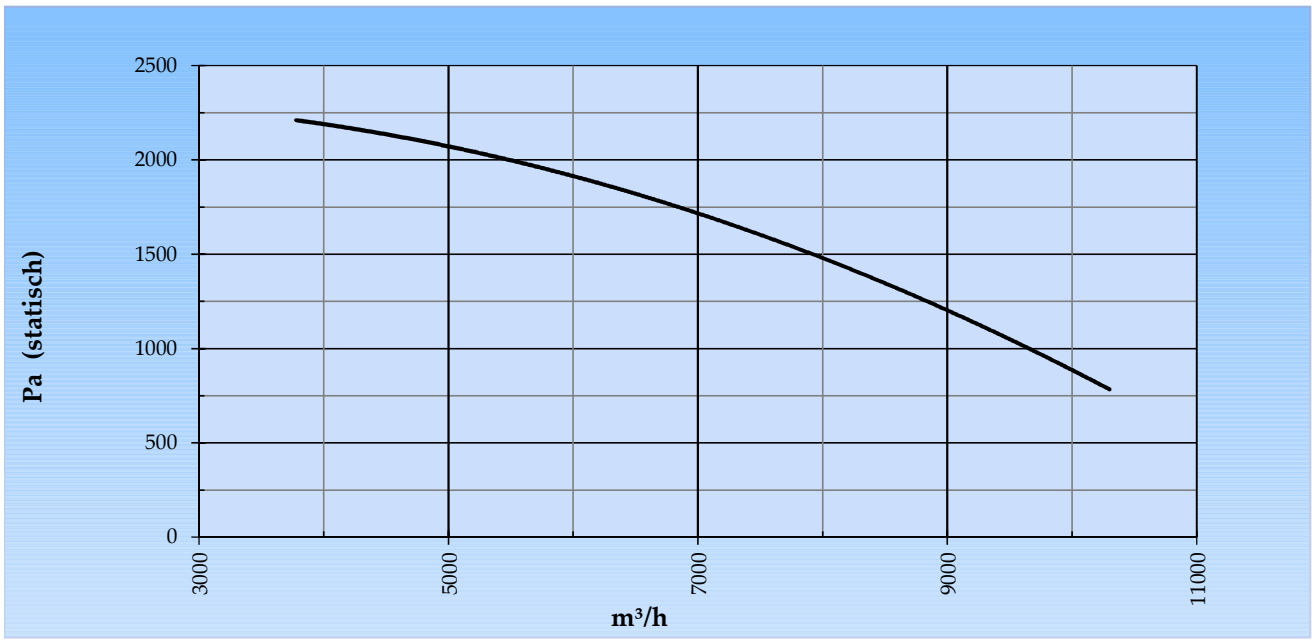

Possible discharge positions:

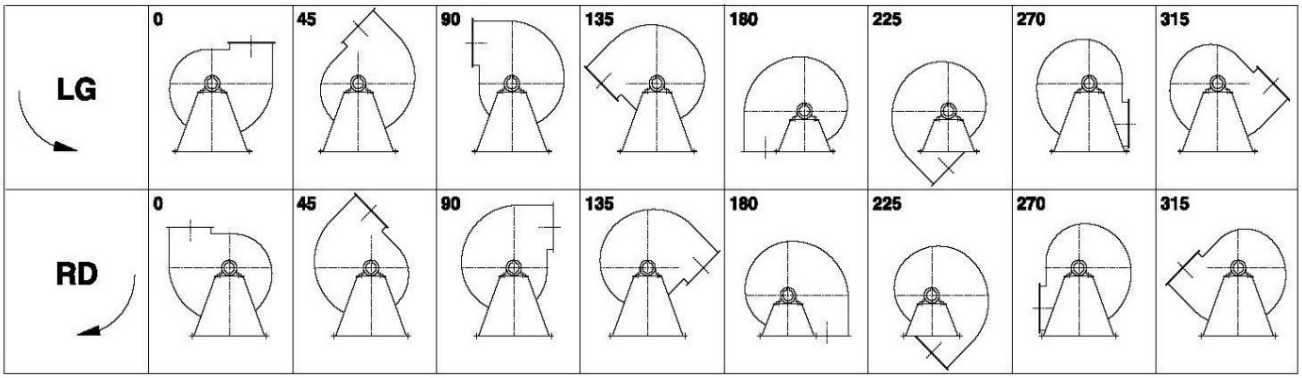

** (Pos 180 and 225 extra price)*

Possible accessories

Mounting profiles for load distribution	STF 057501
Counterflange inlet/outlet	
Flexible connection inlet/outlet max. 80°C	zzØ 450 / pzØ 500
Anti-vibration mountings	4x 40x30/B/70° ShA
Inspectiondoor	
Drain	
Shaft seal without asbestos	
Coolingwheel (medium max. 150°C)	(incl. coating RAL9006)
Flexible connection inlet/outlet max. 150°C	zzØ 450 / pzØ 500
ATEX version	Zone 1 / 2 / 21 / 22
ATEX motor	Ex nA / Exe / Ex de
Coating suitable for outdoor application	RAL 5010 / RAL ....
Stainless steel version	304 / 316 / ...
Acoustic enclosure	

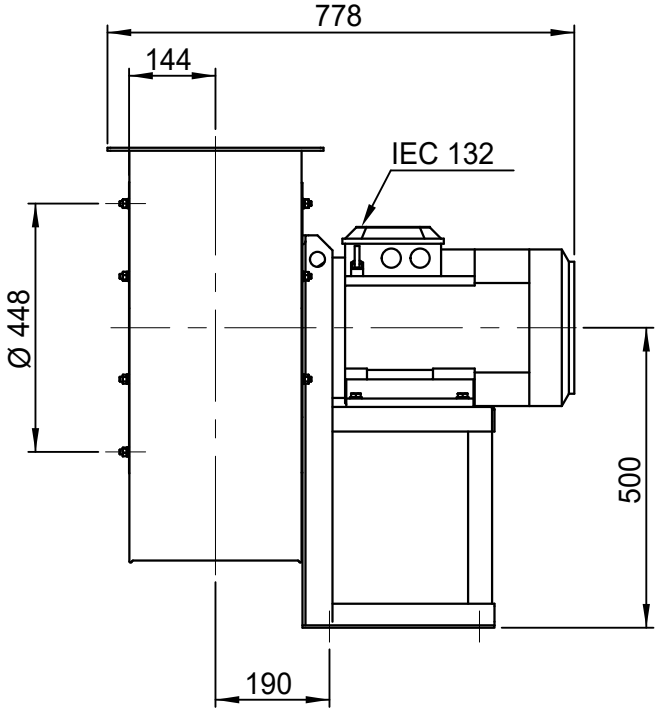

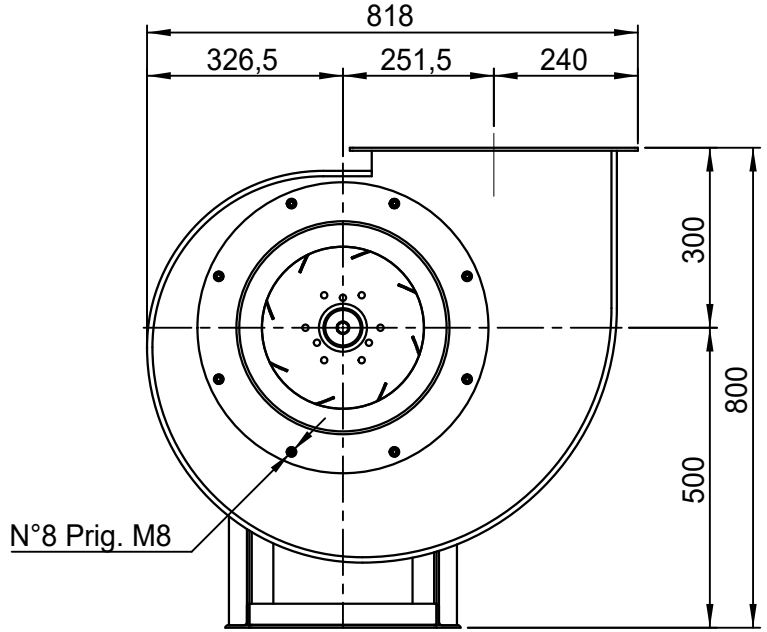

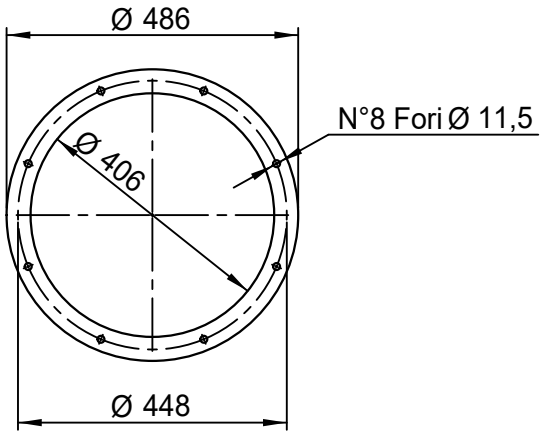

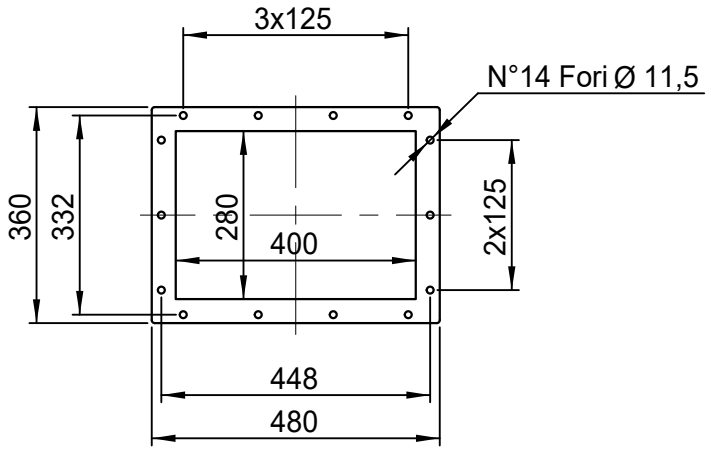

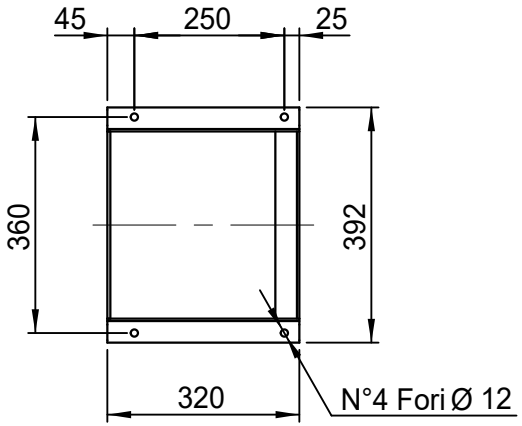

DESCRIZIONE - DESCRIPTION	SCALA 1:12	DISEGNATO - PREPARED	FORMATO
BPR 401/B - RD 0	DATA 21/07/2014	Galiotto M.	A4
	SOSTITUISCE IL - REPLACED THE N° ABPR401A411B000		
	SOSTITUITO DAL - REPLACES BY N°		

		N.DISEGNO - N.DRAWING	REV.
Copy 18-2-2020	Slingerland ventilatoren	V1BPR401B0012	00

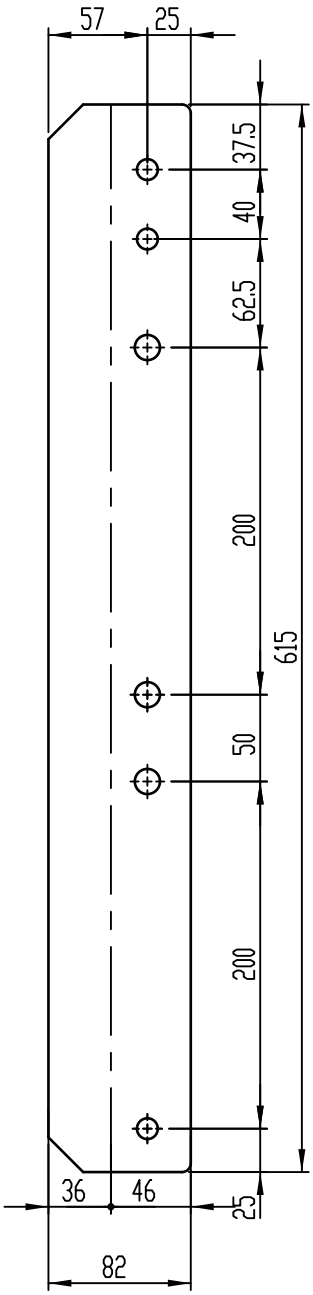

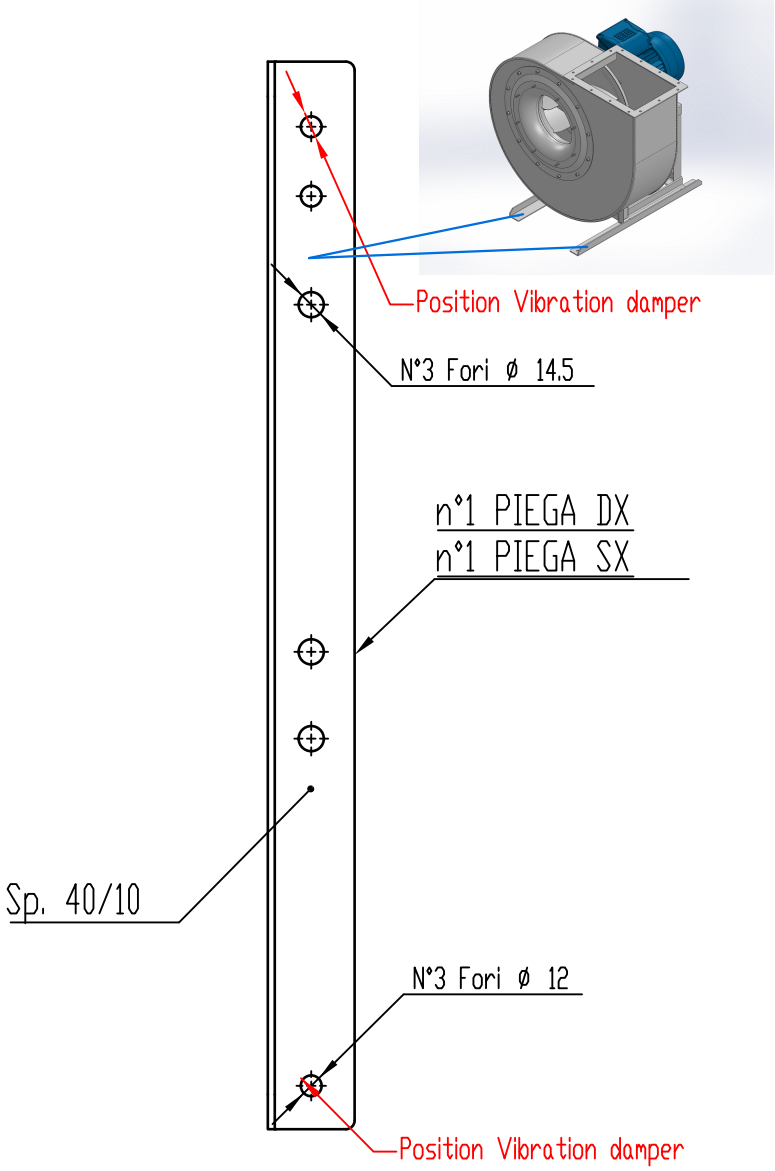

COMM.

N°

REV	DATA - DATE	DESCRIZIONE - DESCRIPTION	DISEGNATO PREPARED	CONTROLLATO CHECKED
01	04/12/2019	Adattamento alle sedie nuove	Galiotto M.	De Santi G.
00	23/11/2015	PRIMA EMISSIONE	Galiotto M.	De Santi G.

DESCRIZIONE - DESCRIPTION	MATERIALE - MATERIAL	NR.FILE	PESO - WEIGHT
	Fe 360	EUR00067997	Kg 1.53

DESCRIZIONE - DESCRIPTION

Staffe per Puffer L=615

IEC 100-112-132

Slingerland ventilatoren

SCALA	DISEGNATO - PREPARED	FORMATO
1:4	Galiotto M.	A4
DATA 04/12/2019		

SOSTITUISCE IL - REPLACED THE N°

SOSTITUITO DAL - REPLACES BY N°

N.DISEGNO - N.DRAWING	REV.
STF057501	01