APRF 631B

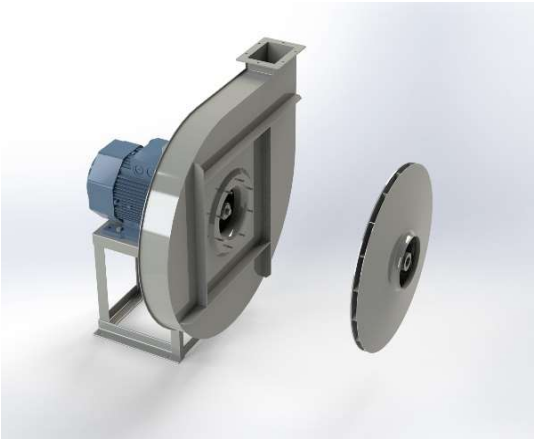

Centrifugal fan **model APRF, Es.4**
Single inlet fan, direct driven with an IEC-standard motor in form B3 which is mounted on a motorbase. This series of high-pressure fans is characterized by a high efficiency with electricity saving by installing a special impeller with backward curved blades. The robust industrial fan is totally made of steel and painted in the agate gray RAL 7038. The fan is suitable for the transportation of clean and slightly dusty air.

General data:

Drive	direct	
Motor position	horizontal	
Material casing/base	Steel	
Material impeller/hub	Steel	
Coating/protection	RAL 7038	
Operating temperature (max.)	15 (80)	°C
Medium density (altitude 0 m)	1,226	kg/m^3
Impeller speed	2.940	rpm
Weight	150	kg
Sound pressure level ±3 (at 1,5 m near the fan with inlet and outlet ducted, in free field)	82	dB(A)

Electric motor:	132S	IEC
Power	5,5	kW
Motor speed	2.940	rpm
Electric supply	3x400V50Hz	V/Hz
Full load current	10,6	A
Enclosure	55	IP
Shape	B3T	
Efficiency class	IE3	

Curve APRF 631B @ 2940rpm @ 15°C @ 0m

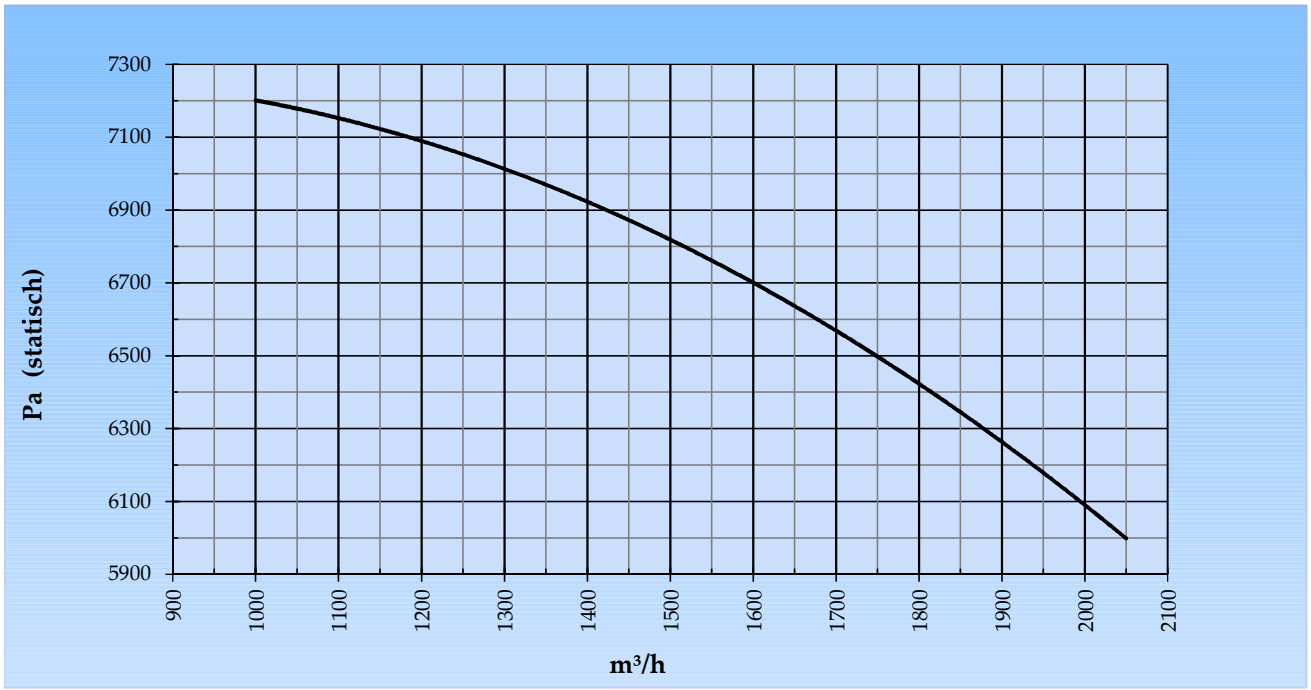

Possible discharge positions:

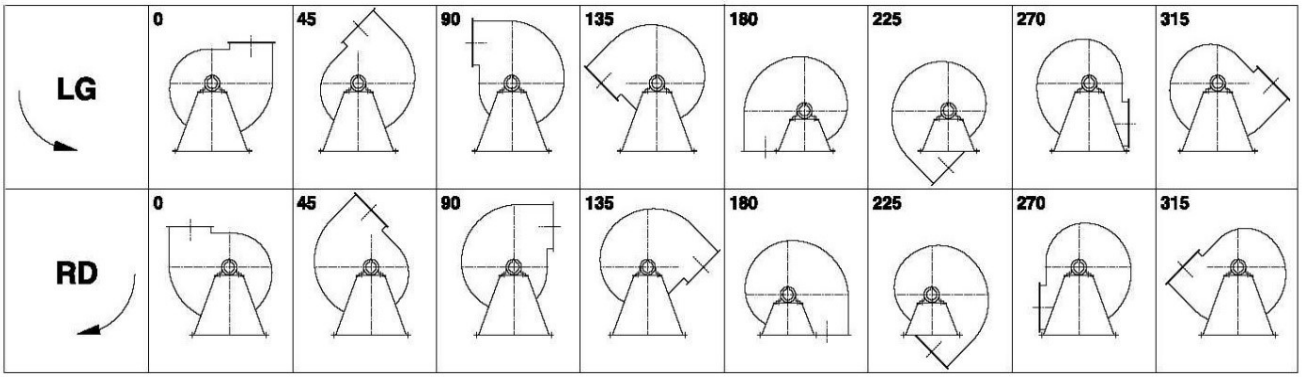

* *(Pos 180 en 225 tegen meerprijs)*

Possible accessories

Mounting profiles for load distribution	AP13201ST
Counterflange inlet/outlet	
Flexible connection inlet/outlet max. 80°C	zzØ 205 / pz 160x112
Anti-vibration mountings	4x 40x30/B/70° ShA
Inspectiondoor	
Drain connection	
Shaft seal without asbestos	
Coolingwheel (medium max. 150°C)	(incl. coating RAL9006)
Flexible connection inlet/outlet max. 150°C	zzØ 205 / pz 160x112
ATEX version	Zone 1 / 2 / 21 / 22
ATEX motor	Ex nA / Exe / Ex de
Coating suitable for outdoor application	RAL 5010 / RAL ....
Stainless steel version	304 / 316 / ...
Acoustic enclosure	

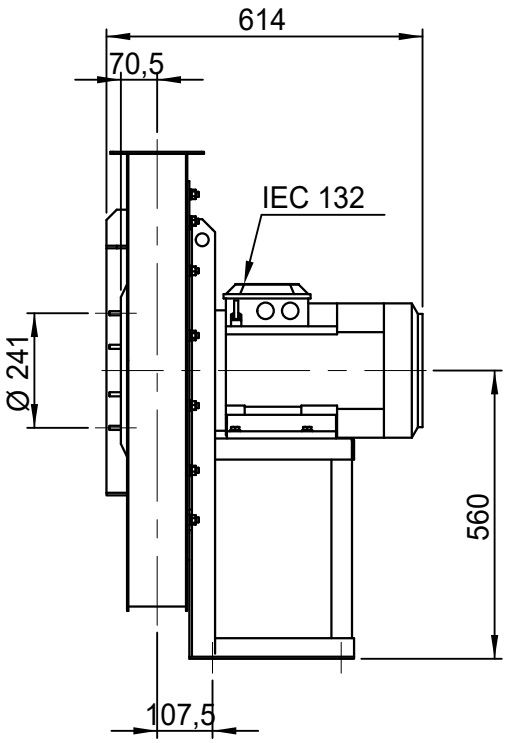

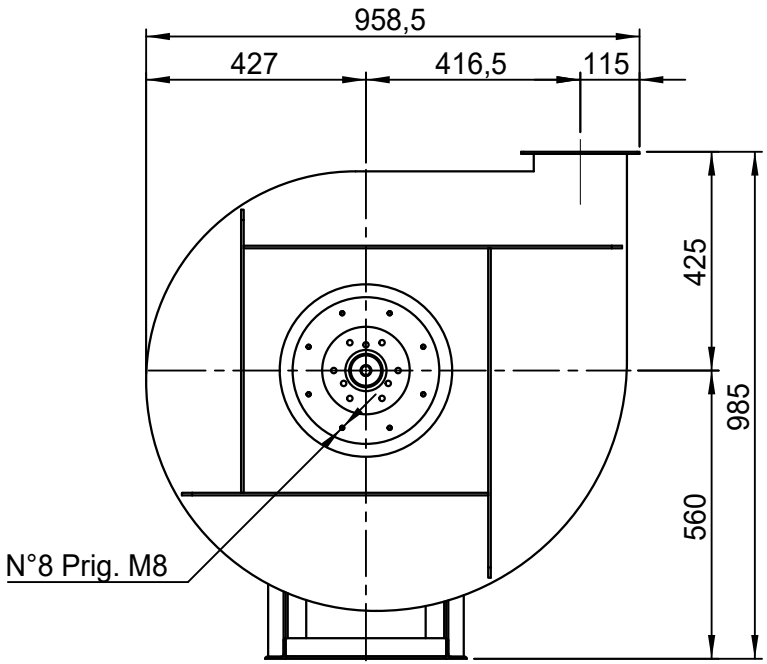

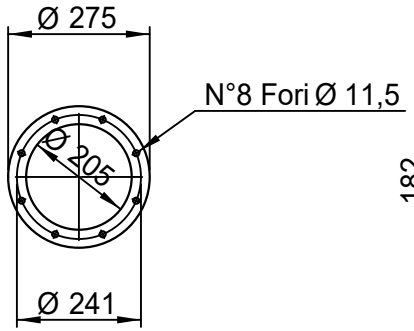

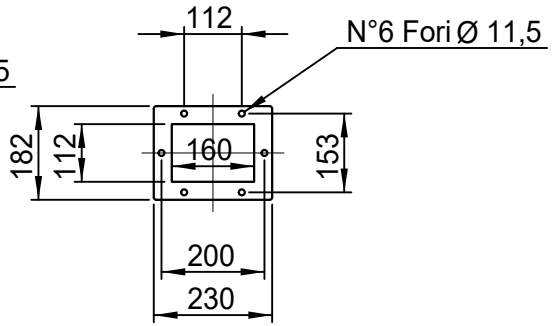

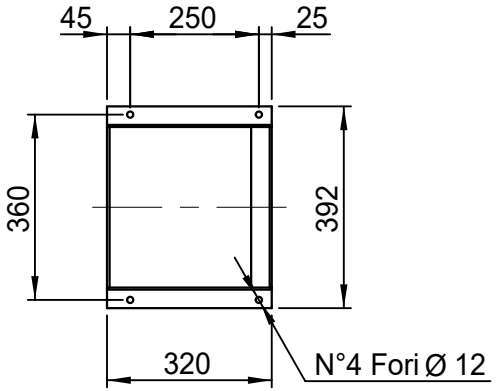

DESCRIZIONE - DESCRIPTION	SCALA 1:14	DISEGNATO - PREPARED	FORMATO
APRF 631/B - RD 0	DATA 20/02/2015	Duregotti P.	A4
	SOSTITUISCE IL - REPLACED THE N° APRF631A411B000		
	SOSTITUITO DAL - REPLACES BY N°		

		N.DISEGNO - N.DRAWING	REV.
Copy 29-6-2020	Slingerland ventilatoren	VAPRF631B0004	00

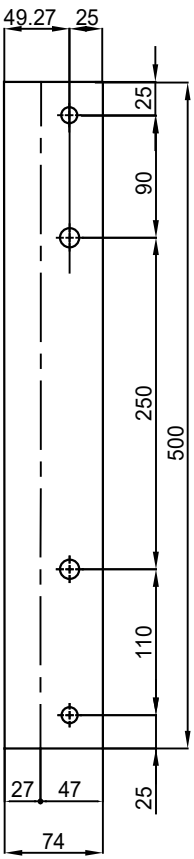

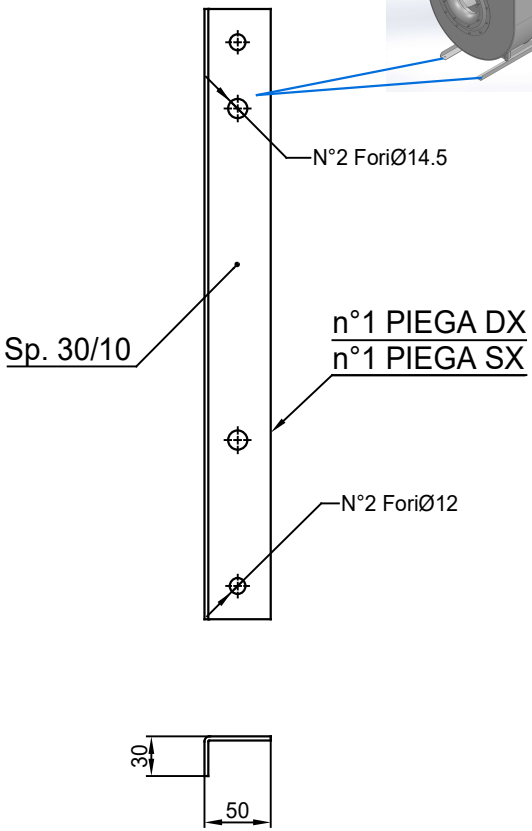

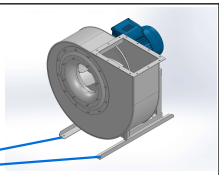

COMM.
N°

REV	DATA - DATE	DESCRIZIONE - DESCRIPTION	DISEGNATO PREPARED	CONTROLLATO CHECKED
00	02/02/2016	PRIMA EMISSIONE	RK	RK
01	16/09/2020	Extension pedestal	MvS	MvS

DESCRIZIONE - DESCRIPTION	MATERIALE - MATERIAL	NR.FILE	PESO - WEIGHT
	Fe 360		Kg

DESCRIZIONE - DESCRIPTION

Staffe per Puffer L=500
IEC 132 / AP series

SCALA	DISEGNATO - PREPARED	FORMATO
1:4		
DATA 02/02/2016	RK	A4

SOSTITUISCE IL - REPLACED THE N°
SOSTITUITO DAL - REPLACES BY N°

N.DISEGNO - N.DRAWING

STF-AP13201ST

Slingerland ventilatoren

REV.

01